P/N 127170-01
Rev. C, 02/2019

AK4F OUTSIDE COMBUSTION AIR KIT - THROUGH THE FLOOR DUCTING

[FOR USE WITH APPLIANCE MODELS ALPHA32/36, MARQUEE36/42/50, TAURUSST/PF, VALIANT32, VEGA32/36/42, PLANTATION48, GEORGIAN36/42/50, INGLENOOK36, WINSDORST, MONTEREYPF36, CRAFTSMANST36, CRAFTSMAN36/42 BRT4536, BRT4336/42, BRT4036/42, BRT2532/36, BRT2032, BRT2332T, VRT4032/36, VCT4032/36, VCM3026, VRT6036/42/50, VRT4536/42/50, VRT43ST/PF, VRT3032/36/42, VCT3032/36/42, VRT2036/42, VCT2036/42, WRT6842/50, WRT6036/42/50, WRT4842/50, WRT4536/42/50, WRT40ST/PF/CR/CL, WRT35ST, WRT3836, WCT3836, WRT3036/42, WCT3036/42, WRT2036/42, WCT2036/42, BELMONT36/42/50, COLUMBUS36/42, BLACKSTONE36/42, BARKLEYST/PF, CUMBERLAND32/36/42, OAKRIDGE36/42]

KIT CONTENTS

1 ea. Collar
1 ea. Hood
1 ea. Flex Duct, 4" x 3'
1 ea. Instruction Sheet

Cat. No.	Model	Description
F1093	AK4F	Outside Combustion Air Kit - Through the Floor

REQUIRED TOOLS AND SUPPLIES

High-Temp Duct Tape

GENERAL INFORMATION

Combustion Air Kit model AK4 is designed to provide outside air to the fire for combustion.

READ ALL THE STEPS BEFORE STARTING THE INSTALLATION

THE FIREPLACE MUST BE OFF AND COLD BEFORE BEGINNING.

ALL WARNINGS, PRECAUTIONS AND INSTRUCTIONS IN THE INSTALLATION AND OPERATION MANUAL PROVIDED WITH THE APPLIANCE APPLY TO THESE INSTRUCTIONS.

If you encounter any problems, need clarification of these instructions or are not qualified to properly install this kit, contact you local distributor or dealer.

If any of these parts are missing or damaged, contact your dealer or IHP.us.com for referral information.

INSTALLATION

Locate air inlet cover plate on fireplace's outer surround and remove it. Cut out any visible insulation that may obstruct airflow. Place outer tab of inlet tube over mating hole next to the opening and secure with screws previously removed from cover plate. Seal any remaining gaps around inlet tube with hi-temp duct tape or non-combustible sealant .

Install the outside air vent termination in a location that would not eventually be obstructed by bushes, snow or other obstructions. Also, locate the vent near the fireplace to make flex duct installation easier. The flex duct supplied measures approximately 10 inches compressed and up to approximately 3 feet extended.

Be very careful not to distort flex duct when extending and watch for sharpness at the edges (use gloves). Slip flex duct onto inlet collar and vent collar. Clean flex duct surface from oil and dirt at the ends and secure flex duct to collars with any hi-temp duct tape to provide a good seal.

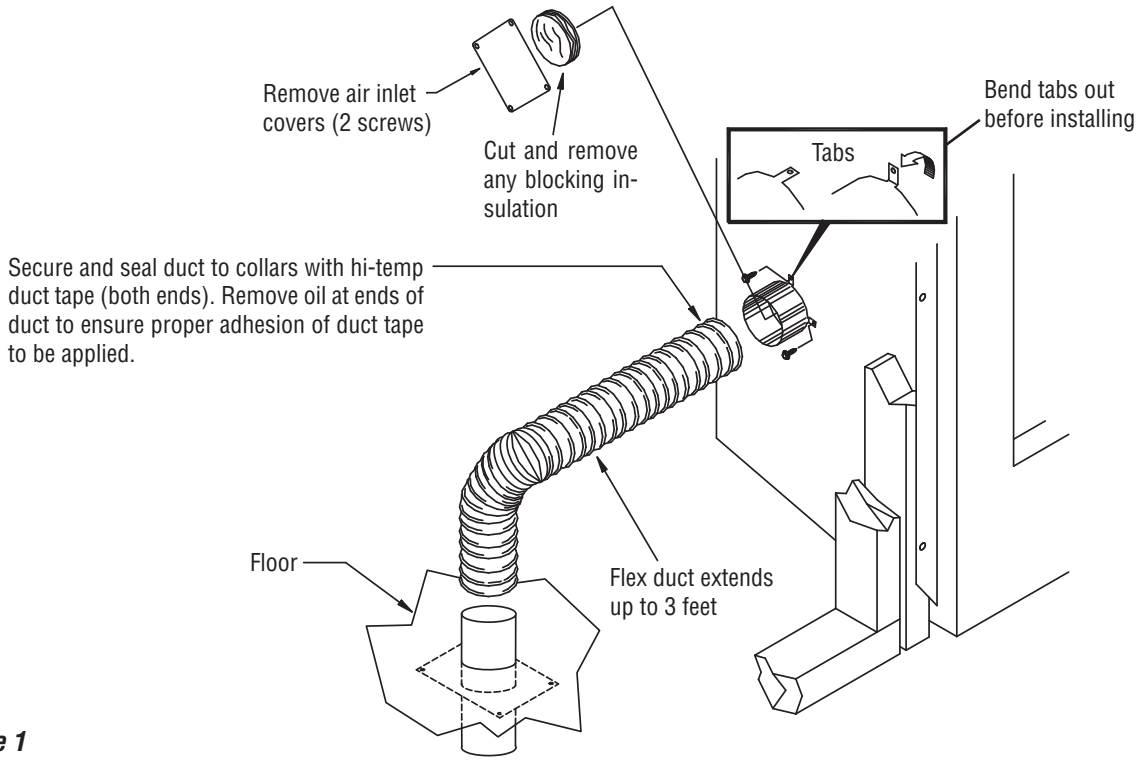

Figure 1

IHP reserves the right to make changes at any time, without notice, in design, materials, specifications, prices and also to discontinue colors, styles and products. Consult your local distributor for fireplace code information.

Printed in U.S.A. © 2014 Innovative Hearth Products
P/N 127170-01 Rev. C 02/2019

IHP
1769 East Lawrence Street • Russellville, AL 35654